Dimensions & Performance Characteristics

SERIES 505 (.25 lbs.) - NOT FOR RADIAL LOADING

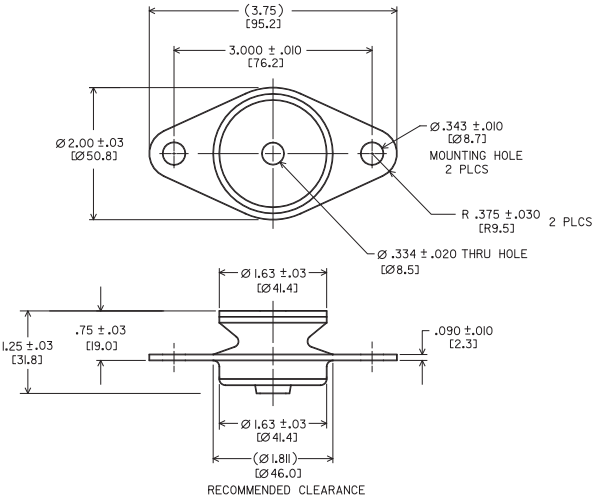

AXIAL STATIC LOAD RANGE - 505 (LBS.)				COLOR
Code	Min.	Nominal	Max.	CODE
-1	12.5	25	38	Red & White
-2	20	40	60	Blue & White
-3	30	60	90	Yellow & White

SERIES 506 (.312 lbs.) - NOT FOR RADIAL LOADING

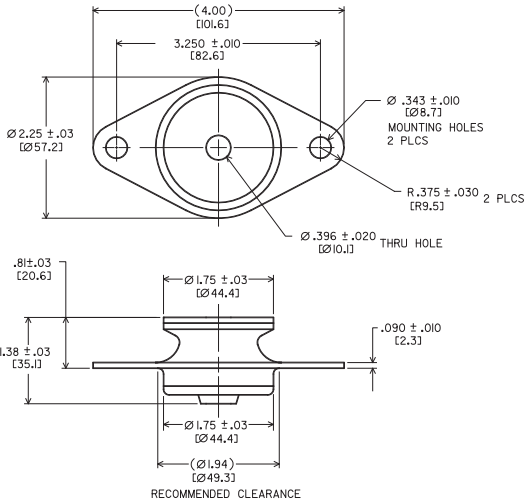

AXIAL STATIC LOAD RANGE - 506 (LBS.)				COLOR
Code	Min.	Nominal	Max.	CODE
-1	25	50	75	Red & White
-2	35	70	105	Blue & White
-3	50	100	150	Yellow & White

505 Series Performance Data

Load vs. Deflection

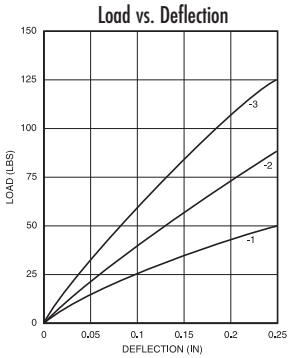

Load vs. Natural Frequency

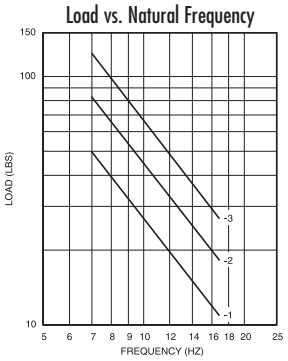

506 Series Performance Data

Load vs. Deflection

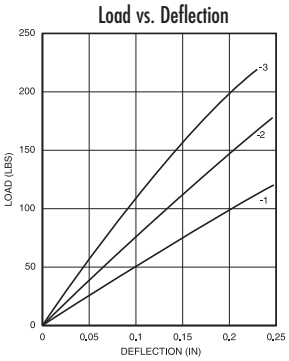
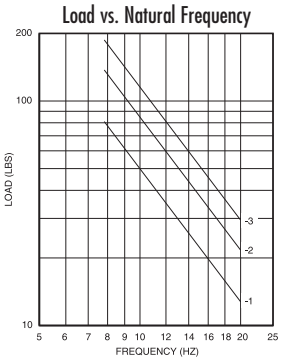
Load vs. Natural Frequency